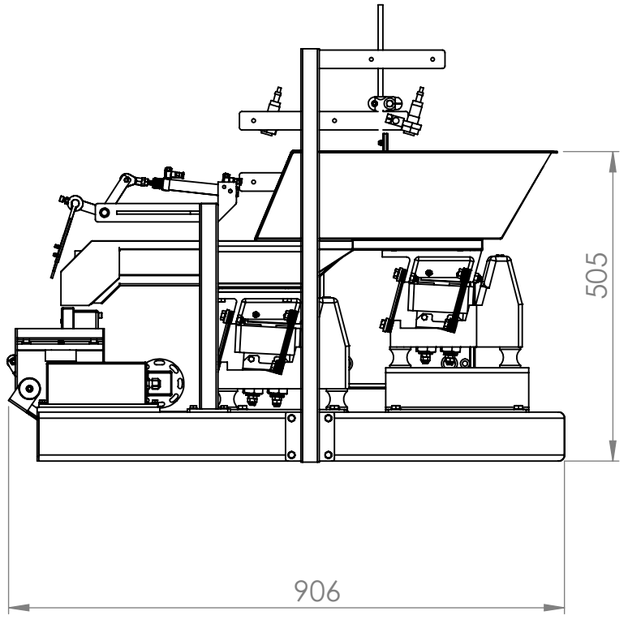

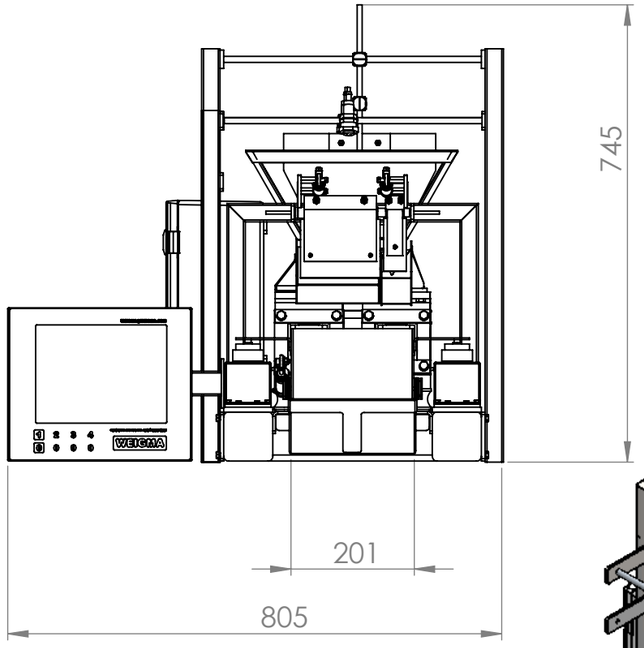

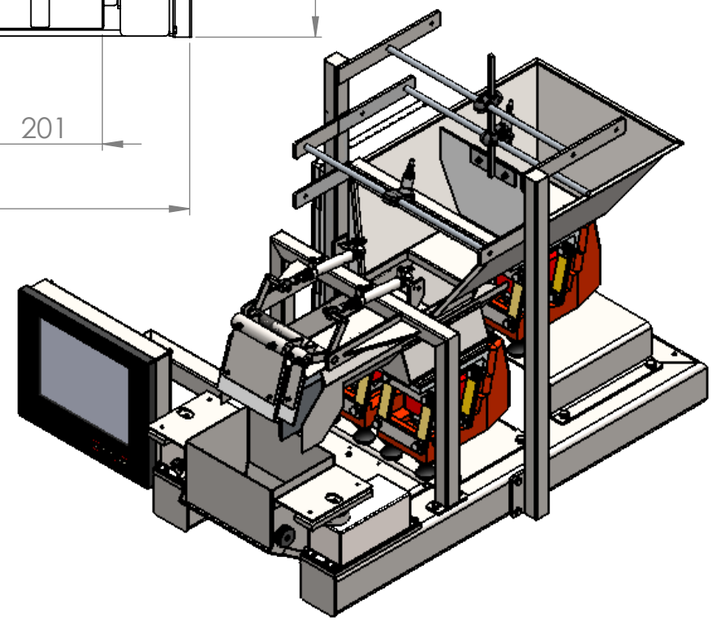

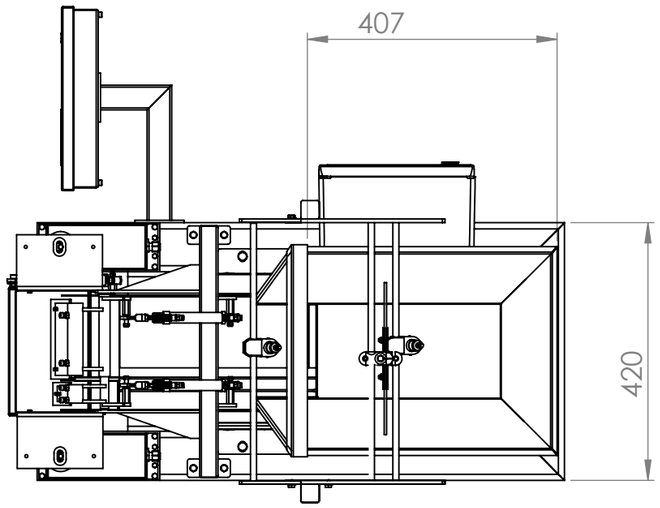

H:\DISEÑO\WEIGMA\VPV\VPV45 MONO\VPV45 MONO SIN PIESDefault
VPV45 MONO SIN PIES

UNLESS OTHERWISE SPECIFIED: DIMENSIONS ARE IN MILLIMETERS SURFACE FINISH: TOLERANCES: LINEAR: ANGULAR:	FINISH:				DEBUR AND BREAK SHARP EDGES	CODE:	REVISION
						WEIGMA ®	
	NAME	SIGNATURE	DATE			TITLE:	
DRAWN							
CHK'D							
APPV'D							
MFG							
Q.A				MATERIAL:		DWG NO. VPV45 MONO SIN PIES	A3
				WEIGHT:		SCALE:1:10	SHEET 1 OF 1